Embedded Industrial Panel PC

15" Sheet-Metal Backpack Industrial Panel PC

Model: HC150RPC

The LFTouch embedded industrial panel PC is built for kiosks, machinery HMIs and self-service terminals. The enclosure combines a tempered glass front, aluminum-profile frame and a cold-rolled steel rear backpack (silver / black optional). It supports embedded, wall-mount, desktop and VESA arm installation, with floor-stand, hanging and adjustable mounts available as options.

Highlights

G+G 10-Point Capacitive Touch

Responsive projected-capacitive touch with over 50 million touches lifetime, ≥6H surface hardness and ≥85% light transmittance — operated by finger or conductive stylus.

Flexible Embedded Mounting

Sheet-metal backpack design for embedded cabinet installation, plus wall-mount, desktop and VESA arm options; floor-stand, hanging and adjustable mounts available.

Power & Environment

12V 5A external power adapter, 0–50 °C operating and -10–60 °C storage temperature; wide-voltage module available as an option.

Intel Core or Android Platform

Five Intel Core option tiers from 3rd Gen i3 up to 10th Gen i7, or an optional Android board (RK3288 / RK3568 / RK3576 / RK3588) with 1 TOPS NPU.

Rich, Expandable I/O

1×LAN, 2×COM, 4×USB, VGA, LINE OUT and MIC as standard; LAN expandable to 2, COM to 6 (RS232/RS485), USB to 6, plus wide-voltage, GPIO, LPT and aviation-connector options.

Customization Options

Custom colors and silk-screen logo, high-brightness display option, and memory / SSD upgrades across the range.

Product Specifications

GENERAL	
Model	HC150RPC
Screen Size	15"
Overall Dimensions	367×294×50 mm (Windows version) / 367×294×41.8 mm (Android / driver board version)
Cutout Dimensions	339.4×266.4 mm R10
Packing Dimensions	415×110×355 mm
Housing Material	Tempered glass front, aluminum-profile sides, cold-rolled steel rear backpack (silver / black optional)
WINDOWS SPECS (OPTIONAL)	
CPU	Intel Core™ 3rd Gen i3-3217UE / i5-3317U; 4th Gen i3-4010U / i5-4200U / i7-4500U; 6th Gen i5-6200U / 8th Gen i7-8550U; 10th Gen i5-10210U / i7-10510U
Memory	4GB DDR3L 1333MHz (upgradeable to 8GB / 16GB)
Storage	64GB SSD (upgradeable to 128GB / 256GB / 512GB; optional additional 2.5" HDD)
Graphics / Network	Intel HD Graphics integrated GPU; Realtek RTL8111F Gigabit Ethernet
Operating System	Windows 7 / 8.1 / 10, Linux
Wi-Fi (Optional)	Wi-Fi and Bluetooth (optional)
4G (Optional)	4G function (optional)
I/O Ports	1×LAN / 2×COM / 4×USB / 1×VGA / 1×LINE OUT / 1×MIC (LAN expandable to 2, COM to 6, USB to 6)
Speaker	Built-in 2W speaker
ANDROID BOARD (OPTIONAL)	
CPU	Quad-core 32-bit Cortex-A55, up to 2.0GHz; board options: RK3288 / RK3568 / RK3576 / RK3588
GPU	ARM Mali-G52 2EE GPU; supports OpenGL ES 1.1/2.0/3.2, OpenCL 2.0, Vulkan 1.1; built-in high-performance 2D hardware acceleration
NPU	1 TOPS computing power
Memory	2GB (optional 4GB / 8GB)
Storage	16GB (optional 32GB / 64GB / 128GB)
Multimedia	Supports 4K@60fps H.265/H.264/VP9 video decoding, 1080P@100fps H.265/H.264 encoding, and 8MP ISP; supports HDR and dual-screen mirroring
Display Interface	HDMI 2.0 up to 4K@60Hz; MIPI-DSI up to 1200×1920; 1×dual-8 LVDS + backlight interface up to 1920×1080; 1×IR receiver, 1×red LED, 1×green LED
Peripheral Interfaces	10/100M auto-negotiation Ethernet; 2.4G Wi-Fi and BT 4.1; 4×USB 2.0 host, 1×USB 3.0, 1×USB OTG; 2×TTL serial ports (TTL/RS232 optional), 1×debug serial port; 1×I2C, 4×GPIO; speaker interface up to two 8Ω 5W speakers; 1×Mic input, 1×headphone output, 1×audio output
LCD PANEL	
Resolution	1024 × 768
Aspect Ratio	4:3
Brightness	350 cd/m²
Viewing Angle	Full viewing angle
Colors	16.7M

Contrast Ratio	1000:1 (Typ.) (transmissive), 72% NTSC
TOUCH SCREEN	
Touch Type	G+G capacitive 10-point touch screen
Input Method	Operated by finger or conductive stylus
Touch Life	>50 million touches
Max Resolution	4096 × 4096
Linearity Error	<2.5 mm
Light Transmittance	≥85%
Surface Hardness	≥6H
ENVIRONMENT & INSTALLATION	
Installation	Embedded, wall-mount, desktop, VESA standard support arm
Power Supply	12V 5A external power adapter
Operating Temperature	0–50 °C
Storage Temperature	-10–60 °C
Operating Current	≤5A
UPGRADE OPTIONS	
Memory	Upgradeable to 4GB / 8GB / 16GB
Storage	SSD upgradeable to 128GB / 256GB / 512GB; optional additional 2.5" HDD
Display	High-brightness option available
Appearance	Custom colors / silk-screen logo
Stand / Mount	Optional floor stand, hanging mount, or adjustable mount
I/O Ports	COM ports convertible from RS232 to RS485; additional COM, USB, LAN ports, wide-voltage module, aviation connector, LPT, GPIO and other interfaces available
WHAT'S IN THE BOX	
Accessories	Industrial Panel PC × 1 · Power adapter × 1 · Power cord × 1 · Warranty card × 1 · User manual × 1

Schematics

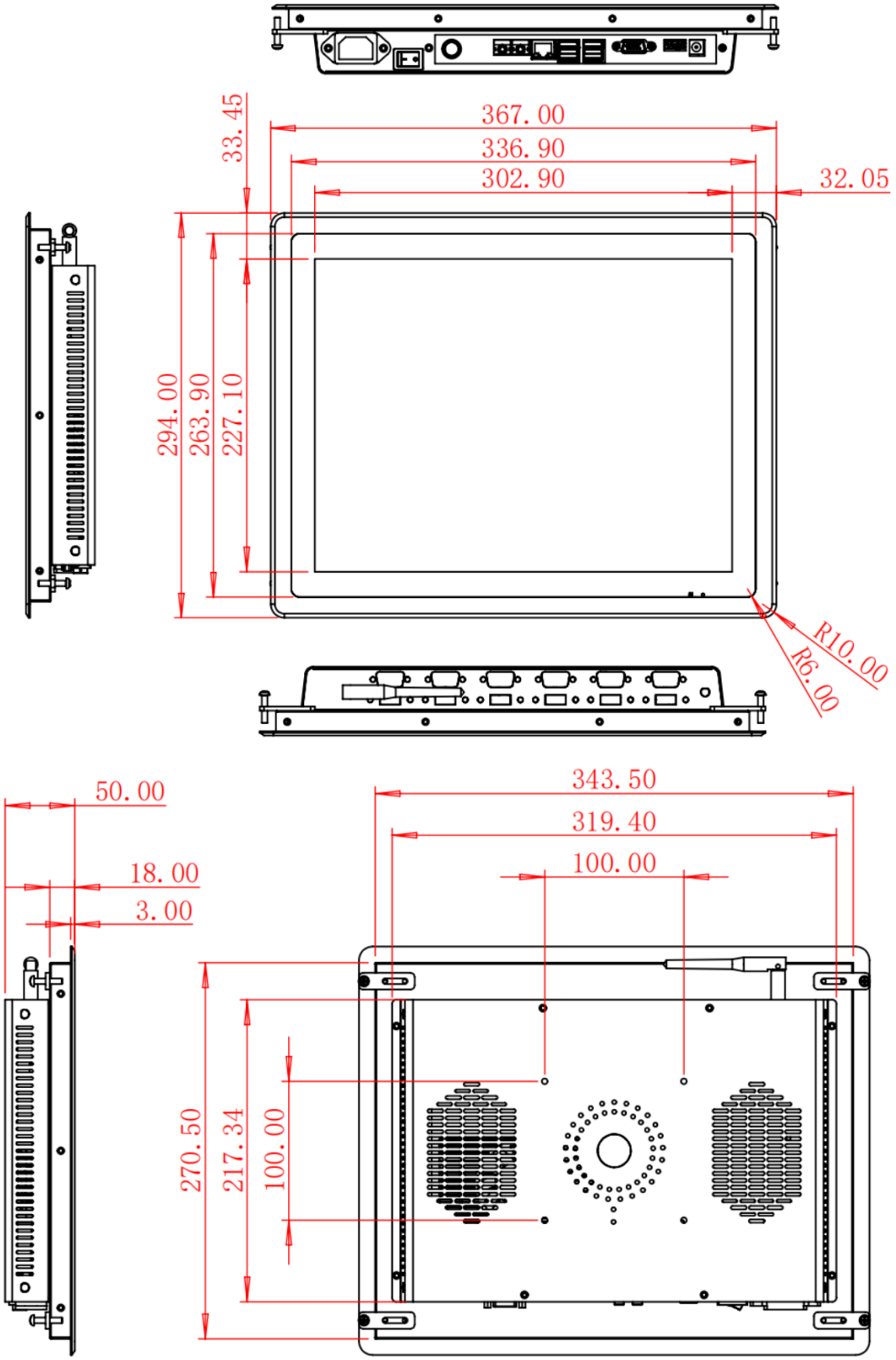

Dimension Drawings (Unit: mm)

Installation Methods

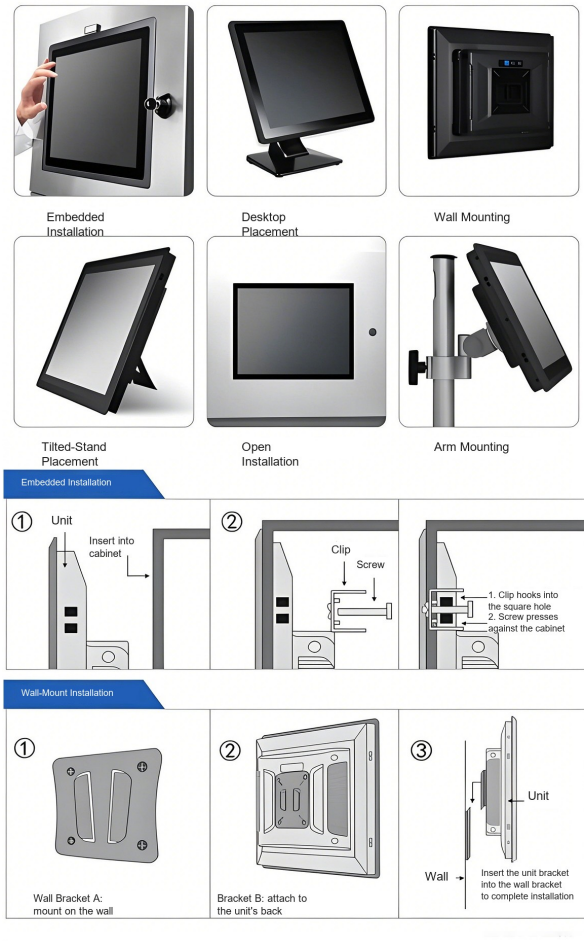

Embedded / desktop / wall / tilted-stand / open / arm installation

Terminal & I/O Interfaces

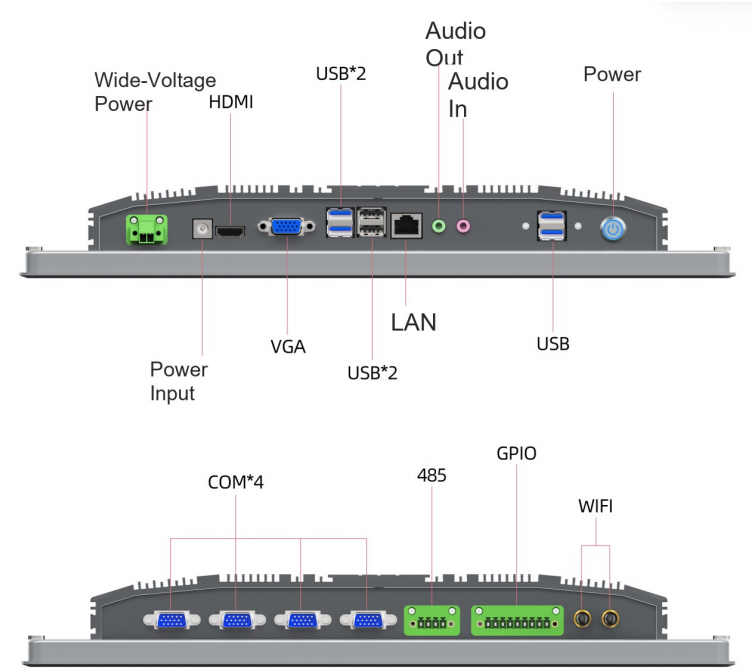

Standard I/O interface layout